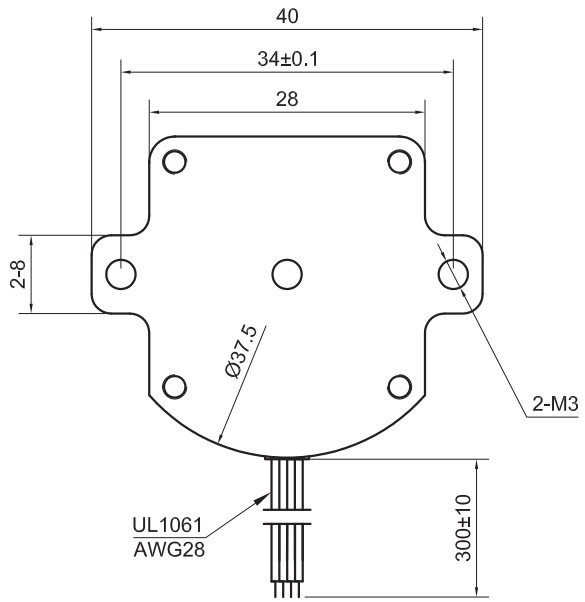


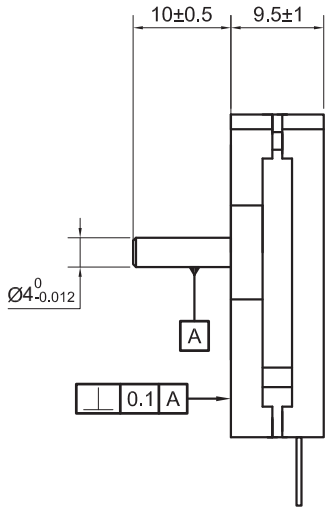


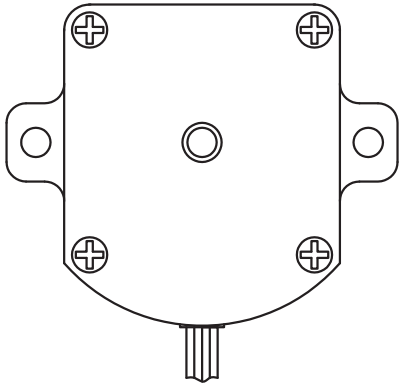

| SPECIFICATION / CONNECTION | BIPOLAR |
|---|---|
| AMPS/PHASE | 0.50 |
| RESISTANCE/PHASE(Ohms)@25°C | 4.00±10% |
| INDUCTANCE/PHASE(mH)@1KHz | 0.80±20% |
| HOLDING TORQUE(Nm)[lb-in] | 0.01[0.09] |
| STEP ANGLE(°) | 1.80±5.00% |
| DYNAMIC AXIAL LOAD(N) | 2.40 |
| DYNAMIC RADIAL LOAD(N)@SHAFT LENGTH 20 mm | 5.00 |
| ROTOR INERTIA(g-cm²) | - |
| WEIGHT(Kg)[lb] | - |

RELIABILITY:MTBF 6000 HOURS OR MORE @24V/300RPM

TEMPERATURE RISE:MAX.80°C（MOTOR STANDSTILL;FOR 2PHASE ENERGIZED）

AMBIENT TEMPERATURE -20°C~50°C[ -4°F~122°F]

INSULATION CLASS B 130°C[266°F]

DIELECTRIC STRENGTH 500VAC FOR 1MIN.(BETWEEN THE MOTOR COILS AND THE MOTOR CASE)

| TYPE OF CONNECTION (EXTERN) | | MOTOR | |
|---|---|---|---|
| PIN NO | BIPOLAR | LEADS | WINDING |
| 1 | A — | RED | A |
| 2 | A\ — | BLU | A\ |
| 3 | B — | ORG | B |
| 4 | B\ — | YEL | B\ |

FULL STEP 2 PHASE-Ex. ,
WHEN FACING MOUNTING END (X)

| STEP | A | B | A\ | B\ | | CCW |
|---|---|---|---|---|---|---|
| 1 | + | + | - | - | ↓ | ↑ |
| 2 | - | + | + | - | | |
| 3 | - | - | + | + | | |
| 4 | + | - | - | + | CW | |

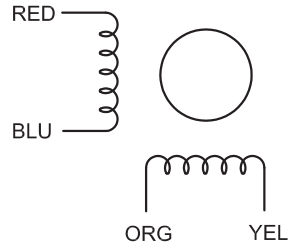


| | | | | |
|---|---|---|---|---|
| | APVD | | 3.20.2019 | STEPPER MOTOR |
| | CHKD | | | |
| 1.5:1 | DRN | | | 11HS04-0504S |
| SCALE | SIGNATURE | | DATE | |