350W Power Supply S-350-48

Features:

- 48V DC 7.3A output
- AC input voltage range: 93~132V/176~264VAC
- 115V/230V AC selected by switch
- High efficiency low cost
- Forced air cooling by built-in DC fan
- Low output ripple and yawp
- Over current, over voltage, short circuit and overheat protections
- 215*115*50mm（L*W*H）

General Specification:

Model	S-350-48
DC Output	48V 7.3A
Wave and Noise	100mVp-p
Inlet Stability	±0.1%
Load Stability	±0.3%
Efficiency	86%
Adjustable range for DC Voltage	42.5V~52V
AC Input Voltage	93~132V/176~264VAC Slected by Switch
AC Input Current	6.24A/115VAC 3.3A/230VAC
Working Temperature	-10~50°C
Safety Standards	GB4943, UL60950, EN60950
EMC Standards	GB9254, 55022, ClassB
Weight	1.1kg
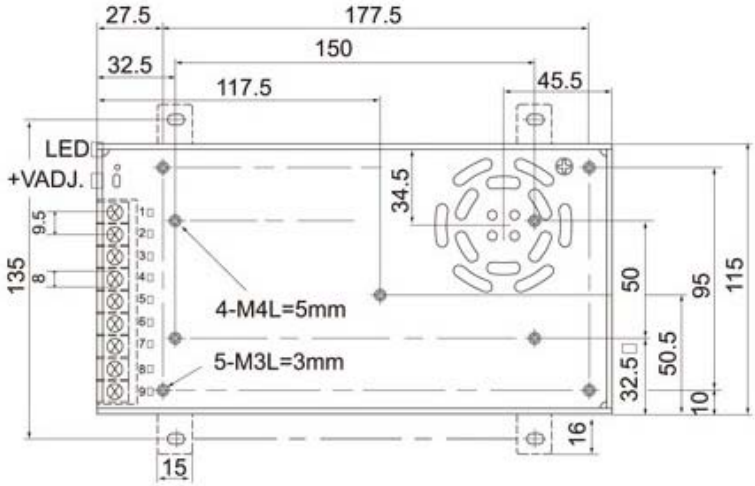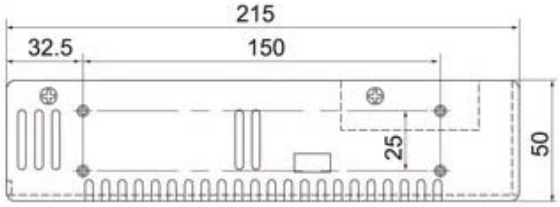
Dimensions: