SPEED - TORQUE CURVE

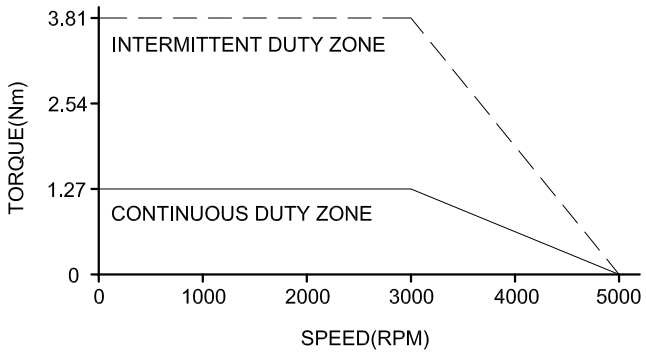

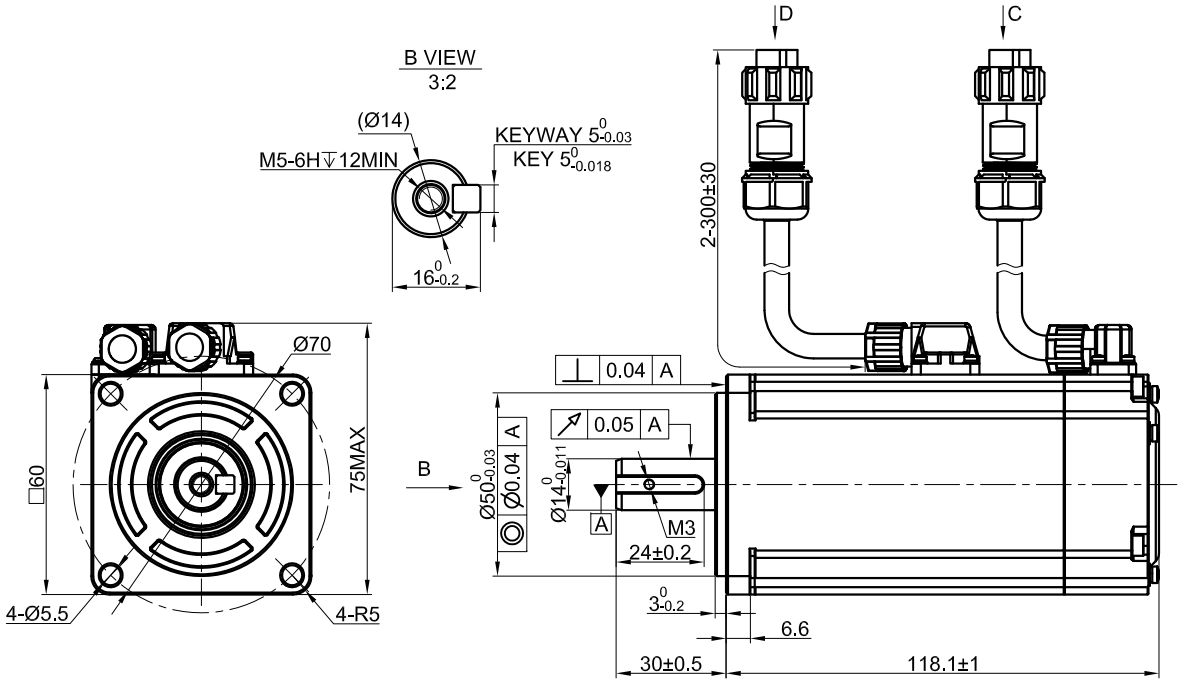

SPECIFICATION	VALUE
RATED VOLTAGE(VAC)	220
RATED POWER(W)	400
RATED TORQUE(Nm)	1.27
PEAK TORQUE(Nm)	3.81
RATED SPEED(RPM)	3000
PEAK SPEED(RPM)	5000
RATED CURRENT(Amp)	2.1
PEAK CURRENT(Amp)	6.5
TORQUE CONST(Nm/Amp)	0.645
BACK EMF CONST(V/KRPM)	39
RESISTANCE(Ω)	5.7
INDUCTANCE(mH)	12
INERTIA($Kg•m^2•10^{-4}$)	0.58
POLES	10
ENCODER TYPE	17bit inc
IP RATING	IP65
WEIGHT(KG)	1.55

D

WIRING DETAILS OF POWER CABLE CONNECTOR						
PIN No.	1	2	3	4	5	6
DESCRIPTION	U	W	V	PE	0V	24V
COLOR	BLU	RED	BLK	YEL/GRE	BLK	RED

C

WIRING DETAILS OF ENCODER CABLE CONNECTOR							
PIN No.	1	2	3	4	5	6	7
DESCRIPTION	PE	5V	0V	SD+	SD-	—	—
COLOR	SHIELD	WHT	BLK	BLU	PUL	—	—

THE PART NUMBER OF CABLE FOR T6M60-400H2B3-M17S MOTOR	
POWER CABLE	CMBST1M5
ENCODER CABLE	CEST1M5

	APVD		6.10.2022	AC SERVO MOTOR
	CHKD			
2:1	DRN			T6M60-400H2B3-M17S
SCALE	SIGNATURE		DATE	